Substation Automation Hybrid

Randy Kimura
GE Digital Energy

Abstract

IEC® 61850 is revolutionizing the integration of protection and control through the introduction of new concepts and technologies. Deploying complete IEC 61850 systems is often not immediately feasible due to economic or technology limitations. A hybrid (IEC 61850 in combination with alternate technologies, for example IEC 60870-5-103, can be initially deployed with the long-term goal of evolving into a complete IEC 61850 system.

Greenfield projects provide an opportunity to design and deploy IEC 61850 substation automation systems. Although the design is typically "from scratch," it may not always be possible to use only IEC 61850 devices. Some examples where non-IEC 61850 devices must be used are:

- IEC 61850 is readily available for protection relays, however, IEC 61850 may not be readily available for non-protection IEDs; for example, the preferred transformer monitoring and diagnostic device may not support IEC 61850.
- A specific IED model that does not support IEC 61850 may be required. One example occurs when a non-IEC 61850 protection relay, at the other end of transmission line, is being matched.

Brownfield projects may also provide an opportunity to deploy IEC 61850-based systems. It would be unusual for all of the existing protection and control devices to be replaced with IEC 61850 devices. Economics and user confidence would dictate the reuse of some installed equipment with the addition of some IEC 61850 devices.

This paper will discuss hybrid substation automation solutions, concentrating on the inclusion of alternate technologies. The discussion includes additional IP-based communications, but also extends to non-IP communications thereby allowing the user to maximize equipment reuse and select best in class equipment for their particular situation. Evolutionary scenarios are used to highlight the conversion from alternate technologies to IEC 61850.

1. Introduction

IEC 61850 Substation Automation Systems is no longer wishful thinking. Although process bus implementation has been slow, the station bus has been delivered for years and is widely accepted. A typical IEC 61850 solution, shown in Figure 1, incorporates IEC 61850 Client/Server, GOOSE and GSSE communications on to a substation LAN.

IEC 61850 Substation Automation Systems can be designed for new systems, replace or retrofit existing systems, and expand an existing system. The goal must always be to use the best available device to meet the user's requirements. The best available device is not always IEC 61850 enabled.

IEC 61850 SUBSTATION AUTOMATION SYSTEMS CAN BE DESIGNED FOR NEW SYSTEMS, REPLACE OR RETROFIT EXISTING SYSTEMS, AND EXPAND AN EXISTING SYSTEM

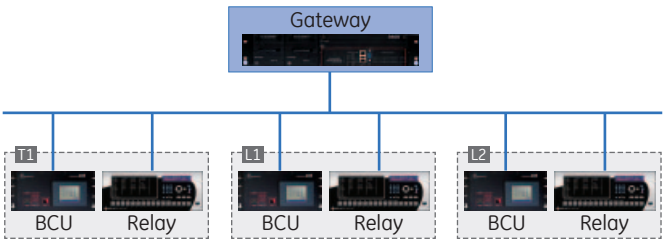

Figure 1.
IEC 61850 Substation Automation System

A hybrid solution is not limited to IEC 61850; additional communication and interfacing technologies are used. The alternate technologies can range from the physical interface to the communication protocol.

2. Greenfield/Replacement

Greenfield projects provide an opportunity to design and deploy IEC 61850 substation automation systems. Complete retrofit Brownfield projects may also provide an opportunity to deploy IEC 61850-based systems. In a complete retrofit all of the existing equipment can be removed. Although the design is typically "from scratch," it may not always be possible to only use IEC 61850 devices.

A suitability evaluation insures it is appropriate to select an IEC 61850 device. Protection scheme coordination, Operation & Maintenance requirements, and user qualification are included in a suitability evaluation.

A protection scheme may be required to match the protection relay installed at the opposite end of the transmission line. The Substation Automation System must be able to adapt when the protection relay already installed at the opposite end of the transmission line does not support IEC 61850. In an ideal situation, the protection relay at the opposite end of the transmission line can be upgraded to, or replaced with, an IEC 61850-capable model thereby allowing the Substation Automation System to remain a "pure" IEC 61850 solution. The ideal scenario is often not possible with non-IEC 61850 protection relays installed at both ends of the transmission line.

Operation and Maintenance concerns can also influence device selection. Examples potentially preventing a device model change include:

- Additional utility personnel training may be required to support a new device model. Coordination of the training can be complicated due to the variety of topics; examples include settings or configuration modification, installation, trouble shooting, diagnostics and repair.

- Sourcing and deployment of the new device's engineering tool may be required to a variety of utility personnel; examples include systems engineers, configuration technicians and field service engineers. In some instances, the cost of the software licenses can be prohibitive. Newer software tools often have increased system requirements that require personal computer hardware and operating system upgrades or replacement.

- The stocking and deployment of spare components is complicated by the addition of a new device.

A typical Substation Automation System can only deploy devices that have been previously tested and approved for use by the end user. Although IEC 61850-capable devices may be available for a particular function, an IEC 61850-capable device may not be available on the approved list of devices. Ideally, an IEC 61850-capable device can be qualified and added to the approved list of devices. Device qualification is often not possible within the required time frame.

Substation Automation Systems were initially designed to incorporate protection and control devices. Additional functionality may also be incorporated; for example, monitoring and diagnostic devices can be integrated into Substation Automation Systems. A Transformer monitoring IED will be added to the example system being studied. IEC 61850 is readily available for protection relays, however, IEC 61850 may not be readily available for non-protection IEDs; for example, the preferred transformer monitoring and diagnostic device may not support IEC 61850.

The following discussion studies single bay solutions and may be extended to include the entire Substation Automation System. The focus is from a protection and control point of view, however, the solutions can be applied to include additional functions. For example, any referenced protection relay could be replaced with a monitoring and diagnostic IED.

2.1 Hardwired Connection

The use of a hardwired interface to transfer information between two devices is a fundamental approach that has been successfully deployed for many years. Reducing copper wiring is one of the benefits initially identified for IEC 61850 Substation Automation Systems. This hardwired approach is contradictory; increasing the associated copper wiring engineering, installation and maintenance costs.

The example, shown in Figure 2, uses a hardwired interface between a protection relay and a BCU. The IEC 61850- capable BCU functions as an IEC 61850 server for the protection relay.

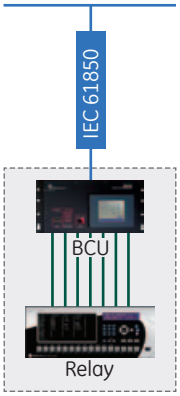

Figure 2.
Harwired

Additional factors to consider when contemplating a hardwired interface include:

- Additional networking infrastructure is not initially required. Networking equipment costs are deferred and will only be applied for an IEC 61850 upgrade.
- Minimal configuration of the BCU and IED is required for the hardwired interface.
- Accurate event reporting requires the BCU to time stamp the hardwired relay data with 1 millisecond accuracy.

2.2 Serial Communication Interface

The use of a serial communication protocol to interface two devices is another solution that has been successfully deployed for many years. Examples of commonly used serial communication protocols include:

- IEC 60870-5-103
- DNP3
- Courier
- Modbus® RTU and Modbus ASCII

Many IEDs support multiple serial communication protocols. The available serial communication protocols must be evaluated against the system requirements. Items to evaluate include:

- Time stamped data reporting capability varies for communication protocols. Most modern serial communication protocols support event reporting, however, a validation is still required as some protocols do not explicitly support SOEs (e.g., Modbus). Protocol evaluation is also required for the reporting of time stamped measurements and accumulated values, as many protocols do not support this functionality.
- Time synchronization is required when time stamped data is reported. The communication protocol and associated infrastructure (e.g., DCE hardware) must be evaluated to insure accurate time synchronization. This evaluation is not required when alternate time synchronization methods are used (e.g., IRIG-B).
- System performance is impacted by the data reporting method. Traditional polled/response data retrieval is the least efficient method. Report by exception techniques improve bandwidth efficiency by only transferring data that has changed.
- A system with significant quantities of measurement data will benefit from a communication protocol that supports deadbanding. Deadbanding will filter minor changes thereby improving bandwidth efficiency.

The solution, shown in Figure 3, uses a serial communication interface between a protection relay and a BCU. The IEC 61850-capable BCU functions as an IEC 61850 server for the protection relay.

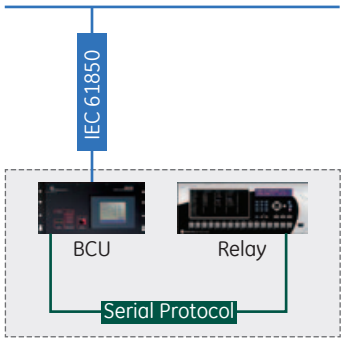

Figure 3.
Serial Communication

Additional factors to consider when contemplating a serial communication interface include:

- Additional networking infrastructure is not initially required. Networking equipment costs are deferred and will only be applied for a IEC 61850 upgrade.
- Additional DCE equipment may be required (e.g., modems, media converters).
- Configuration of the IED server and BCU Client is required for the serial communications.

Multiple devices can be interfaced to the BCU when an addressable communication protocol is used.

2.3 Alternate IP Communications

The use of an IP communication protocol interface is the most recently adopted of the studied solutions. Examples of commonly used alternate IP communication protocols include:

- IEC 60870-5-104
- DNP3/TCP/IP and DNP3/UDP/IP
- Modbus TCP/IP

Many IEDs also support multiple IP communication protocols; an evaluation, similar to the evaluation described for serial communication protocols, is required.

The solution, shown in Figure 4, uses an alternate IP communication protocol to interface the protection relay on to the station bus.

Additional factors to consider when contemplating an alternate IP communication protocol interface include:

- Upgrading to IEC 61850 will be a simpler exercise for devices that support IEC 61850 in addition to the alternate IP communication protocol. Upgrading the device to IEC 61850 is typically limited to a firmware change; the communication infrastructure is already in place.

- Additional networking infrastructure (e.g., switches) may be required, however, this equipment is reusable for an IEC 61850 upgrade.

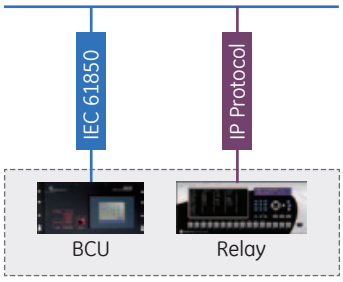

Figure 4.
Alternate IP Communication

3. Retrofit

Brownfield projects provide an opportunity to upgrade, part or all of, a Substation Automation System to IEC 61850. The interface methods (hardwire, serial communication, IP communication) described for Greenfield projects can be applied to the existing system. The Greenfield project device selection criteria are also directly applicable for retrofit projects.

The existing Substation Automation System can consist of:

- All of the IEDs are integrated using one or more serial communication protocols.

- All of the IEDs are integrated using one or more IP-based communication protocols.

- The IEDs are integrated using both serial and IP- based communication protocol.

3.1 Retrofitting a Serial Communication Based System

A serial communication-based Substation Automation System can be challenging to upgrade to an IEC 61850 solution. A substation LAN must be added to the existing system.

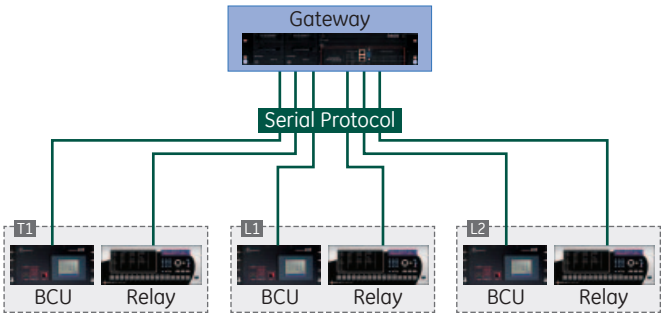

Figure 5.
Serial Communication Substation Automation System

Serial IEDs are individually evaluated to determine the suitability for a IEC 61850 migration. The following interfaces have been identified to connect a device to the substation LAN:

- Upgrade the installed device to interface directly to the substation LAN using IEC 61850. Although this option produces the ideal solution, it requires careful planning as the devices' physical layer must be changed (serial to Ethernet).

- Upgrade the installed device to interface directly to the substation LAN using an alternate IP communication protocol. This solution also requires a change to the devices' physical layer.

- Use a serial communication protocol to interface using an intermediary IEC 61850 device.

- Hardwire the installed device to an intermediary IEC 61850 device.

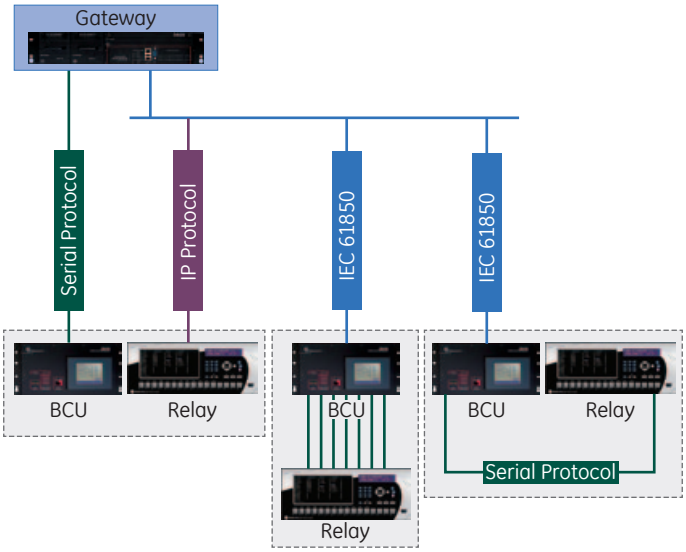

Figure 6.
Retrofitted Serial System

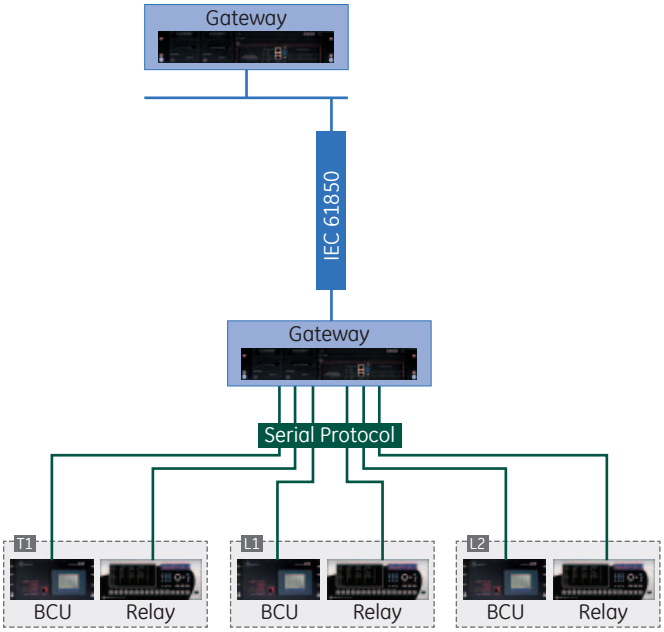

Figure 7.
Dual Gateway Hybrid

Figure 6 shows the hybrid system after the upgrades have been applied the original system shown in Figure 5. The hybrid solution has serial and IP communications to the gateway. The IP communications use IEC 61850 and non-IEC 61850 communication on the station bus. The BCUs in L1 and L2 have been upgraded to directly interface using IEC 61850. The relay in T1 has been upgraded to interface using an alternate IP communication protocol. The relay in L1 uses a hardwire interface to an IEC 61850 enabled BCU. The relay in L2 uses a serial communication protocol to interface via an IEC 61850 enabled BCU. The BCU in T1 is unchanged and continues to use the original serial communication protocol to the gateway.

THE LEAST INVASIVE APPROACH IS TO MAXIMIZE THE REUSE OF THE INSTALLED EQUIPMENT AND ADD IEC 61850 DEVICES FOR THE NEW LINE

An alternative approach is to add a second gateway dedicated to the substation LAN. The existing system is interfaced to the substation LAN using the original gateway. This architecture, shown in Figure 7., is the starting point for the IEC 61850 migration. An evaluation of the installed devices is used to identify the IEC 61850-capable devices that are suitable for direct connection to the substation LAN.

3.2 Retrofitting a IP Communication Based System

Retrofitting an entirely IP communication-based Substation Automation System is simpler than a serial communication-based system. The existing substation LAN can be reused which simplifies the engineering effort required to support the upgrade.

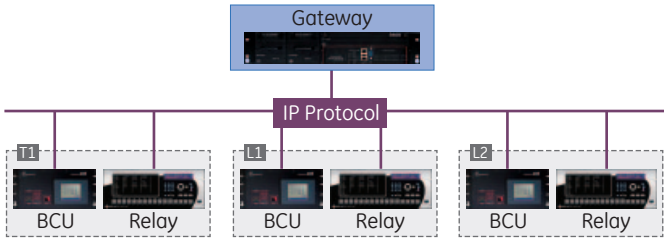

Figure 8.
IP Communication Bases Substation Automation System

The first step when upgrading an existing IP communication-based system is to identify any installed devices that can be directly upgraded to IEC 61850. These devices require the least amount of effort to upgrade. A suitability evaluation is required for the devices targeted for the IEC 61850 upgrade. All suitable and upgradeable devices will use IEC 61850 connectivity on the substation LAN.

In an ideal situation, all of the installed devices are upgraded to support IEC 61850. A suitability evaluation must be performed for any remaining devices to determine if the installed device can be replaced with an IEC 61850-capable device. The suitability of replacing a device must be evaluated using the same criteria discussed for Greenfield projects.

4. Expansion

Brownfield projects may also provide an opportunity to deploy IEC 61850-based systems. It would be unusual for all of the existing protection and control devices to be replaced with IEC 61850 devices. Economics and user confidence would dictate the reuse of some installed equipment with the addition of some IEC 61850 devices.

Consider a substation with one transformer (T1) and two outgoing lines (L1 and L2). An expansion project will add a third outgoing line (L3). The existing Substation Automation System integrates the T1, L1, and L2 IEDs using serial and/or IP based-communication protocols. The expansion project will add the IEDs for the new line and start migrating the Substation Automation System towards an IEC 61850 solution.

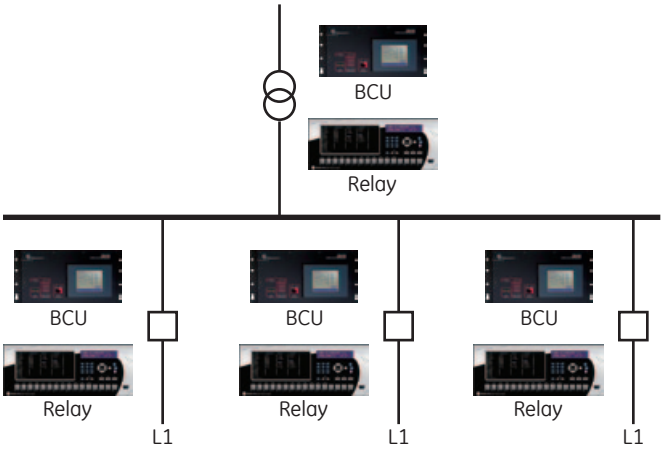

Figure 9.
Substation Expansion

The least invasive approach is to maximize the reuse of the installed equipment and add IEC 61850 devices for the new line. This is always a good first step as it provides a snapshot of the Substation Automation after the station bus has been added. An evolutionary approach can follow; upgrading or replacing installed devices to an IEC 61850 solution. Additional factors to consider when reusing installed equipment include:

- Minimal engineering effort will be required for the existing equipment.
- Installation and commissioning is primarily focused on the new line thereby minimizing the overall effort required.
- Using the in stock spare components minimizes operation and maintenance of the new system. Additional Operation and maintenance costs are limited to spare components and resource training for new devices.

The existing Substation Automation System can consist of:

- All of the IEDs are integrated using one or more serial communication protocols.

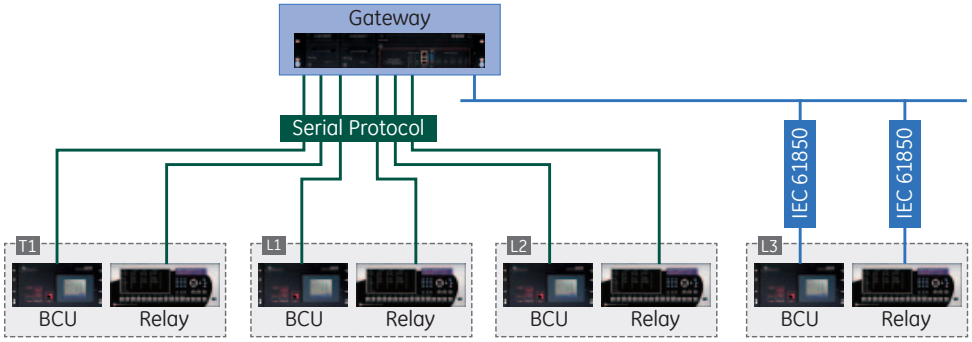

Figure 10.
Serial/IEC 61850 Hybrid

- All of the IEDs are integrated using one or more IP- based communication protocols.
- The IEDs are integrated using both serial and IP- based communication protocols.

4.1 Expanding a Serial Communication Based System

The difficulties to be considered when upgrading a serial communication-based Substation Automation System to an IEC 61850 solution has been previously described for a retrofit. The expansion of a substation is effectively a retrofit with some new equipment added.

The addition of the new devices will add a substation LAN to the existing Substation Automation System. Although the substation LAN only supports IEC 61850, the overall solution is a hybrid simultaneously supporting serial and IEC 61850 communications.

The previously described migration techniques can be applied to migrate the installed devices to IEC 61850.

4.2 Expanding an IP Communication Based System

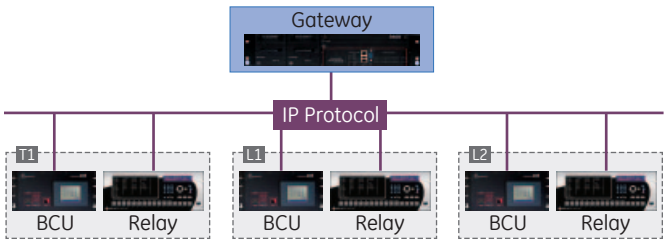

Figure 11.
IP Communication Substation Automation System

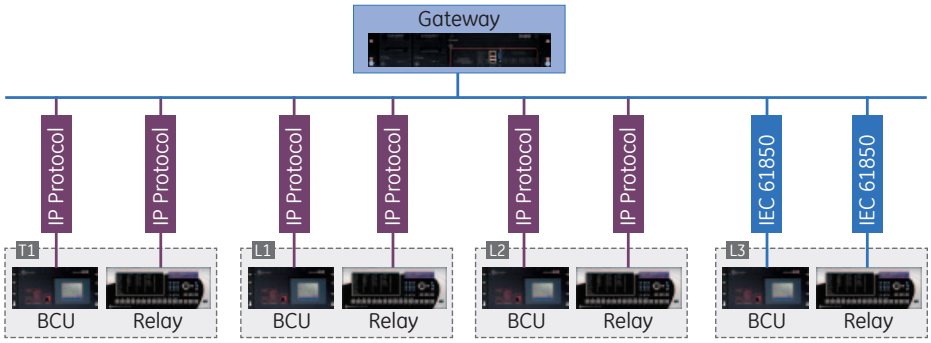

Figure 12.
Hybrid Substation LAN

An existing IP communication-based Substation Automation System can be simpler to upgrade than an entire serial communication-based system. The existing substation LAN is used to interface the IEC 61850 devices.

The new devices will interface to the existing substation LAN. The resulting hybrid substation LAN will simultaneously support IEC 61850 and alternate IP-based communication protocols.

The previously described migration techniques can be applied to convert the installed devices to IEC 61850.

7. Conclusions

Although a complete IEC 61850 approach may be desirable, it is often not possible to deploy these systems. Hybrid Substation Automation Systems, IEC 61850 in conjunction with alternate technologies, can be applied to Greenfield, complete replacement, retrofit and expansion projects. IED selection constrained by IEC 61850 capability is not always possible; deploying a hybrid solution allows a user to select the most appropriate devices for the required task. A hybrid Substation Automation System provides a foundation that can be evolved to a complete IEC 61850 solution.

8. Nomenclature

BCU	Bay Control Unit
DCE	Data Communication Equipment
GOOSE	Generic Object Oriented Substation Event
GSSE	Generic Substation State Event
LAN	Local Area Network